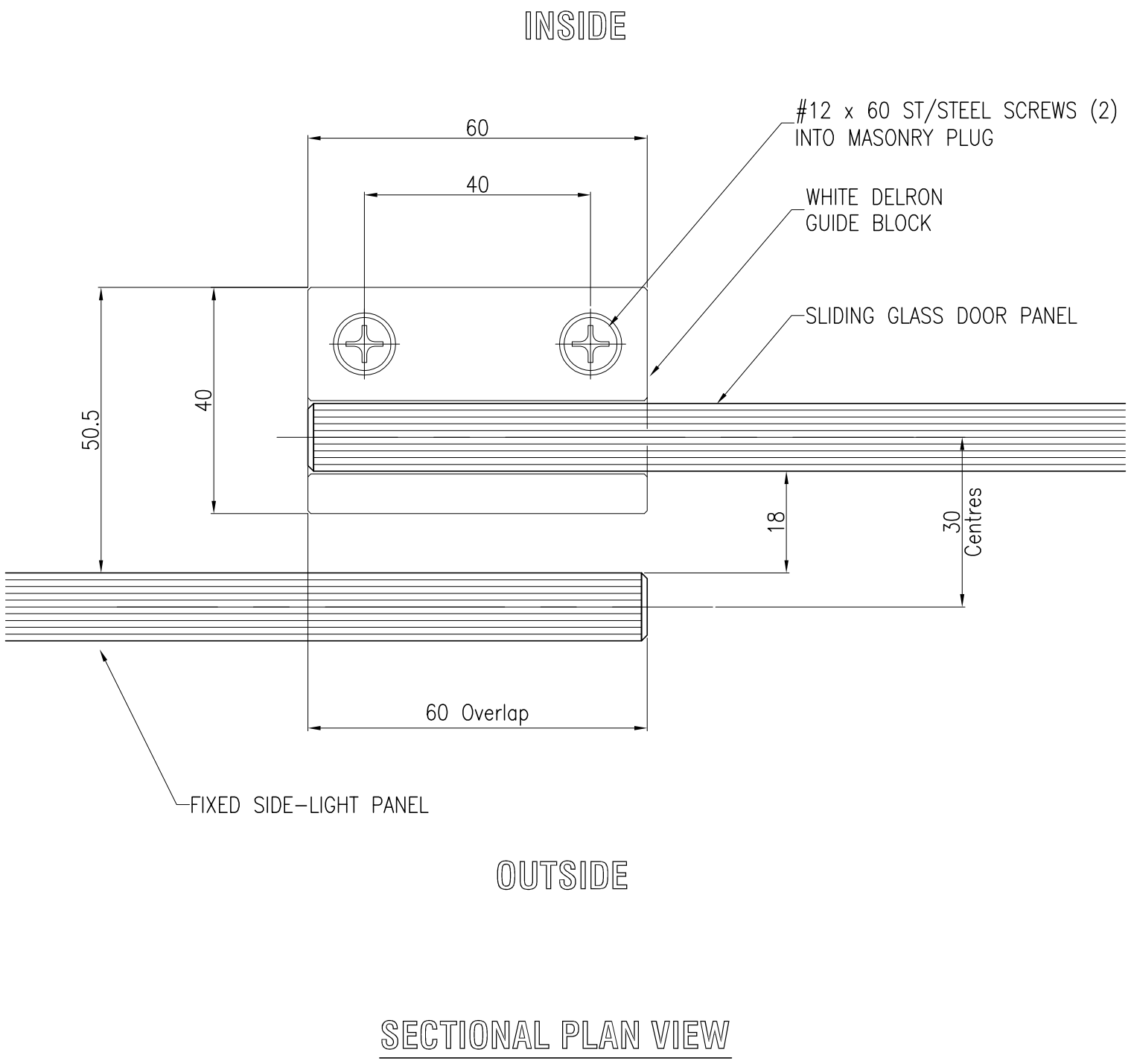

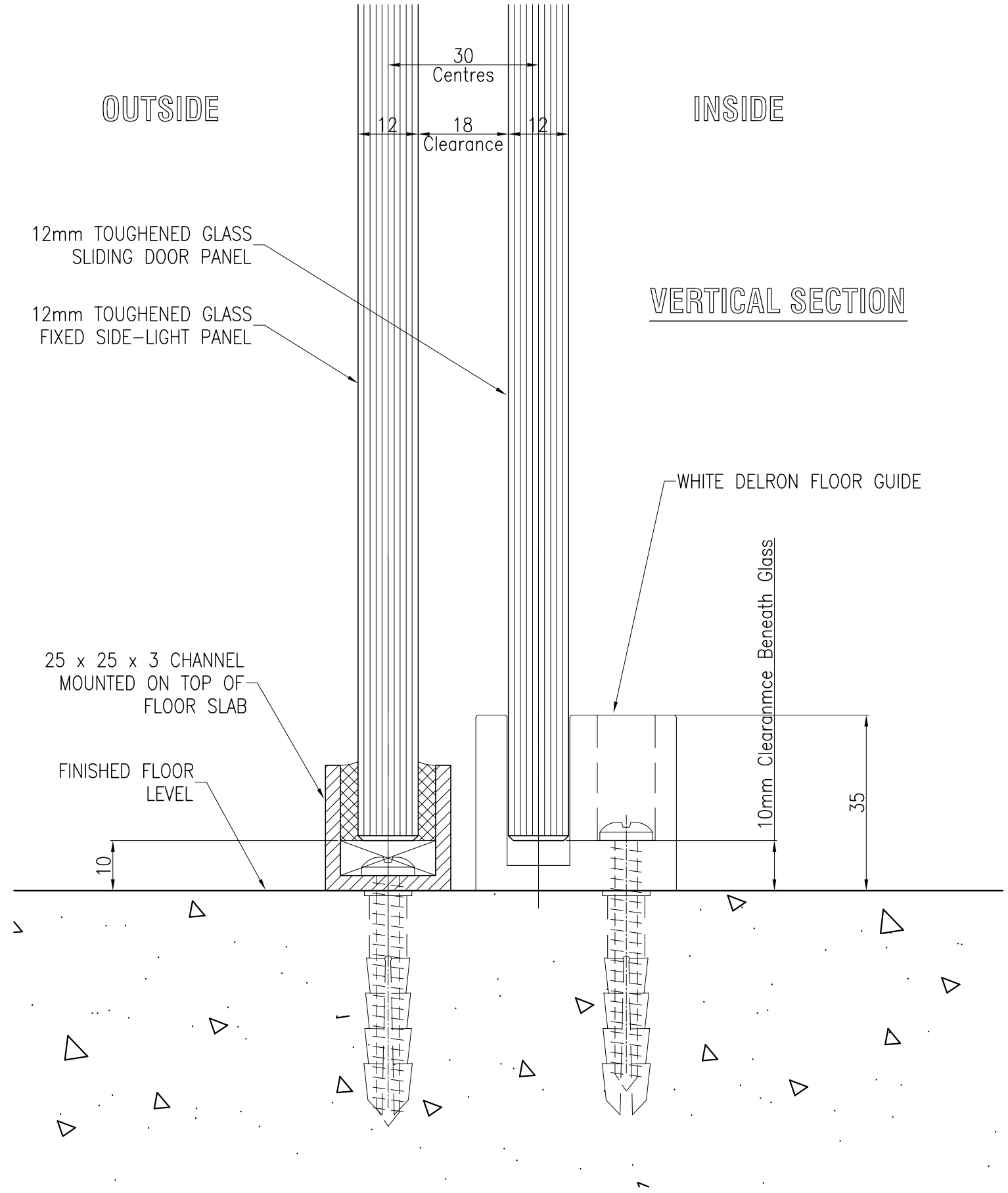

H:\4) CATALOGUE DRAWINGS\2101-SINGA\2100-02.dwg, 6/3/2010 11:50:56 AM

COPYRIGHT
The concepts and information contained in this document are the copyright of Byrnes Entrance Technology. Using or copying this document (or any part of it) without the written permission of Byrnes Entrance Technology would constitute an infringement of that copyright.

Issue	Date	Amendment	Drwn.
-	-	-	-

TITLE

BET-2100
AUTOMATIC DOOR OPERATOR

FRAMLESS GLASS
DOOR GUIDE

Byrnes Entrance Technology
Unit 4 Corner Bay & Atkinson Roads
TAREN POINT NSW 2229
Tel: 02 9531 5559 Fax: 02 9531 5551
Email: byrneset@byrneset.com.au

DRAWN	DATE	SCALE	
JmJones	2010	NTS	
SHEET SIZE A3	DRAWING NUMBER 2100-02	SHEET No. 2	ISSUE -